Boring Head Sets

VERTEX®

Boring Bar
PAGE C83

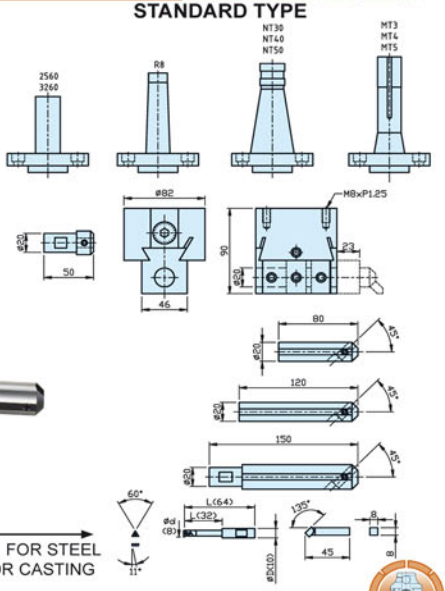

INSERT NO. →
TBGT060102L-W-T1200A FOR STEEL
TBGT060102L-W-G11 FOR CASTING
"SUMITOMO" BRAND

Boring

1 SCALE 0.005 mm, 0.01 mm per Ø

Processing Range ø10 ~ ø240 mm

Simple, extremely rigid construction, Finest materials and craftsmanship are employed to combine strength, flexibillity and accuracy in a tool of unique design. 2 vertical boring tool holes: one centered and one offset. One cross hole for greater versatility and capacity. Dependable adjustment --- far spread graduation for closer reading. Perfectly balanced for high speed operation.
Precision ground & hardened shank are integrating with the head for routing and smoother operation.

MT-3, 4, 5
NT-30, 40 , 50
BT-40, 50
SK-40, 50
C-25, 32

FULL SET

ORDER NO.	SHANK TYPE	DRAWBAR THREAD		Weight (kgs)	CODE NO.
		S.A.E	METRIC		
VBH-102	MT-3		M12X1.75P	5.9	3401-101
VBH-103	MT-4		M16X2.0P	6.1	3401-102
VBH-104	MT-5		M20X3.0P	7	3401-103
VBH-105	R-8	7/16" ~20UNF		5.9	3401-104
VBH-106	NT-30	1/2"-12W or 1/2"-13W	M12X1.75P	5.8	3401-105
VBH-107	NT-40	5/8"-11W	M16X2.0P	6	3401-106
VBH-108	NT-50	1"-8W	M24X3.0P	8.9	3401-107
VBH-109	BT-40	-	M16X2.0P	7.1	3401-108
VBH-110	SK-40	-	M16X2.0P	6.8	3401-109
VBH-111	C-25			5.7	3401-110
VBH-112	BT-50		M24X3.0P	9.4	3401-111
VBH-113	SK-50		M24X3.0P	5.9	3401-112
VBH-114	C-32			5.9	3401-113

SHANK FOR BORING HEAD

ORDER NO.	VBH-MT3	VBH-MT4	VBH-MT5	VBH-R8
WEIGHT (KG)	0.6	1.2	2.1	1
CODE NO.	3401-120	3401-121	3401-122	3401-123

ORDER NO.	VBH-NT30	VBH-NT40	VBH-NT50	VBH-BT40
WEIGHT (KG)	1.1	1.2	3.9	1.9
CODE NO.	3401-124	3401-125	3401-126	3401-127

ORDER NO.	VBH-SK40	VBH-C25	VBH-BT50	VBH-SK50
WEIGHT (KG)	1.9	1.5	3.1	3.98
CODE NO.	3401-128	3401-129	3401-130	3401-131